NO. DE DESSIN
DWG NO. NAM-CL656-IN-03-EN

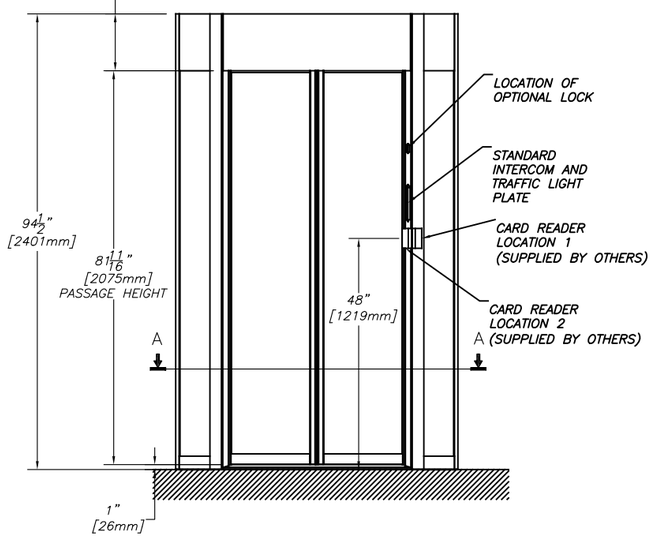

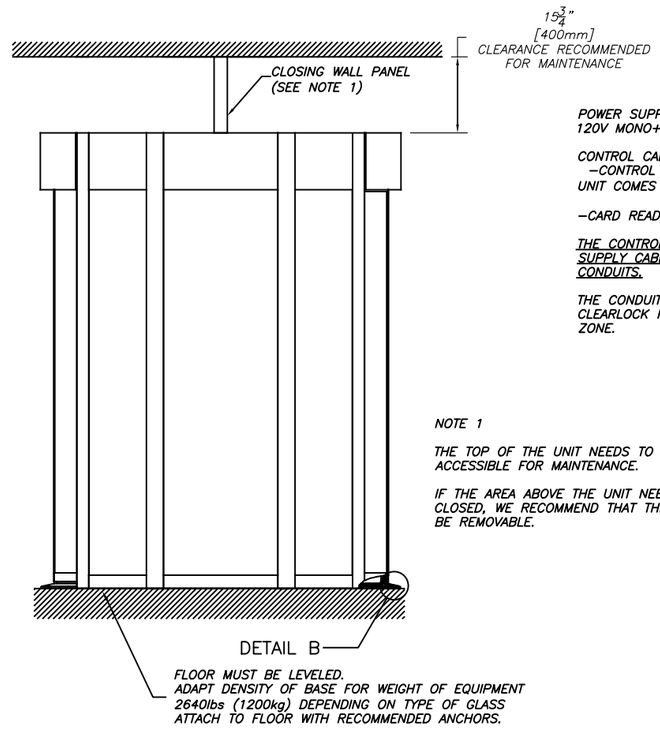

POWER SUPPLY
120V MONO+GND 3 WIRES 12GA

CONTROL CABLES:
–CONTROL CONSOLE
UNIT COMES WITH 82 FEET (25m) OF CABLE

–CARD READER (NOT SUPPLIED)

THE CONTROL CABLES AND THE POWER SUPPLY CABLE SHOULD RUN IN SEPARATE CONDUITS.

THE CONDUITS SHOULD ENTER THE CLEARLOCK FROM THE TOP IN THE HATCHED ZONE.

NOTE 1

THE TOP OF THE UNIT NEEDS TO BE ACCESSIBLE FOR MAINTENANCE.

IF THE AREA ABOVE THE UNIT NEEDS TO BE CLOSED, WE RECOMMEND THAT THE PANEL BE REMOVABLE.

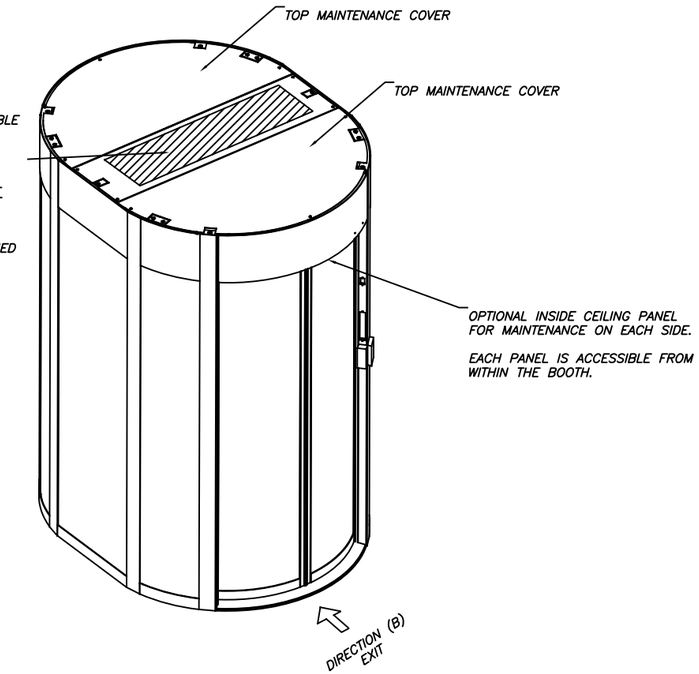

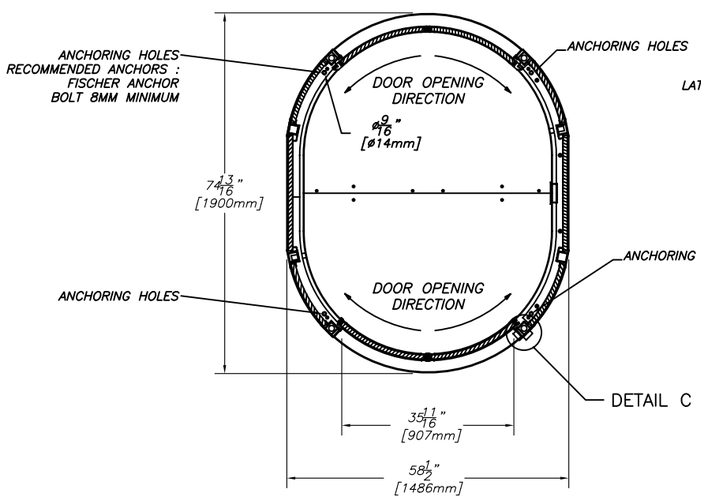

SECTION A–A

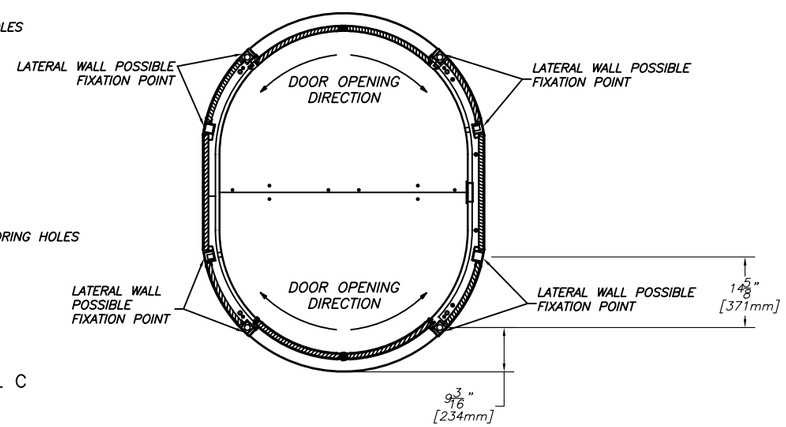

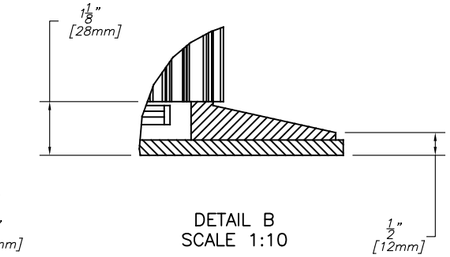

DETAIL B
SCALE 1:10

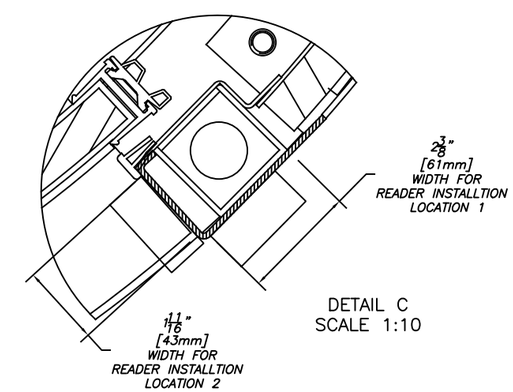

DETAIL C
SCALE 1:10

AUTOMATIC SYSTEMS AMERICA INC. MAKES NO REPRESENTATIONS AS TO THE PROPER POSITIONING OF THE CLEARLOCK AT THE INSTALLATION LOCATION. ESTABLISHING THE PLACEMENT AND LAYOUT OF THE DEVICES AND DETERMINING COMPLIANCE WITH THE APPLICABLE BUILDING CODES, OTHER CODES, LAWS AND REGULATIONS IS THE SOLE RESPONSIBILITY OF THE PURCHASER. INSTALLATION MUST BE PERFORMED BY A QUALIFIED INSTALLER FOLLOWING MANUFACTURER'S INSTRUCTIONS OTHERWISE AUTOMATIC SYSTEMS AMERICA INC.'S WARRANTIES MAY BE VOID.

REV	DATE	MODIFICATIONS/CHANGES	PAR/BY
C	2018/08/01	CORRECTION TEXT	OHL

REVISIONS

MATÉRIAU/MATERIAL

TRAITEMENT/TREATMENT

FINI/FINISH

NB./App.	POIDS/WEIGHT	SURFACE

LES INFORMATIONS CONTENUES SUR LES DESSINS DE ASA Inc. SONT CONFIDENTIELLES ET SONT LA PROPRIÉTÉ DE ASA Inc., TOUTES REPRODUCTIONS, DISTRIBUTIONS OU UTILISATIONS SONT INTERDITES SANS LA PERMISSION DE ASA Inc.

INFORMATION DISCLOSED HERE IS CONFIDENTIAL AND IS THE PROPERTY OF ASA Inc., ANY REPRODUCTION, DISTRIBUTION OR USE IS PROHIBITED WITHOUT A WRITTEN CONSENT BY ASA Inc.

LES DIMENSIONS SONT EN POUCES / DIMENSIONS ARE IN INCHES

TOLERANCES

.XXX	± .005
.XX	± .010
.X	± .015
FRAC.	± 1/32
ANGLES	±1/2°

SAUF SI INDIQUÉS
UNLESS OTHERWISE NOTED

EBARBER & ENLEVER LES ARÊTES VIVES. DIM SELON ASME Y14.5 1994. NE PAS MESURER SUR LE DESSIN

BREAK ALL SHARP EDGES AND CORNERS. ALL DIM PER ASME Y14.5 1994. DO NOT SCALE DRAWING

AUTOMATIC SYSTEMS

FICHIER / FILENAME
NAM-CL656-IN-03-EN.DWG

TITRE / TITLE: IMPLEMENTATION LAYOUT CLEARLOCK 656

ÉCHELLE/SCALE	FORMAT/SIZE	DATE	FEUILLE/SHEET	DE/OF
N/A	B	2016/04/14	1	1

DESSINÉ PAR / DRAWN BY: OHL
VÉRIFIÉ PAR / CHECKED BY: SSA
NO. DE DESSIN/DWG. NO.: NAM-CL656-IN-03-EN
REV: C

CARTOUCHE FORMAT B V. 2009-12-16